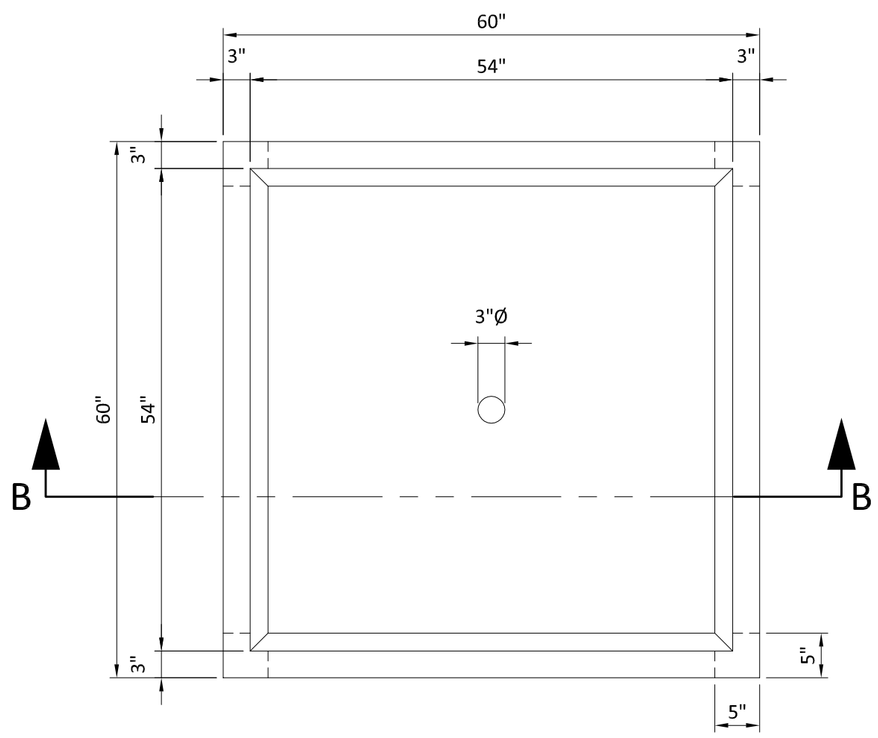

TOP VIEW - 60" x 60" x 48" PLANTER

1" = 1'-0"

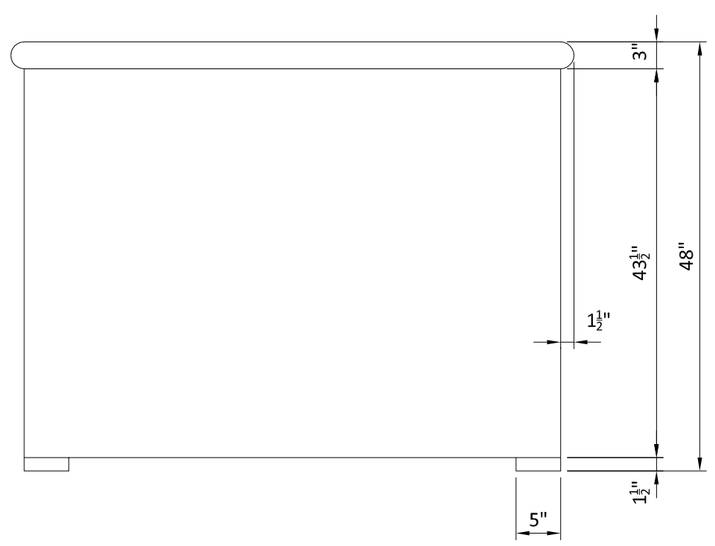

FRONT VIEW - 60" x 60" x 48" PLANTER

1" = 1'-0"

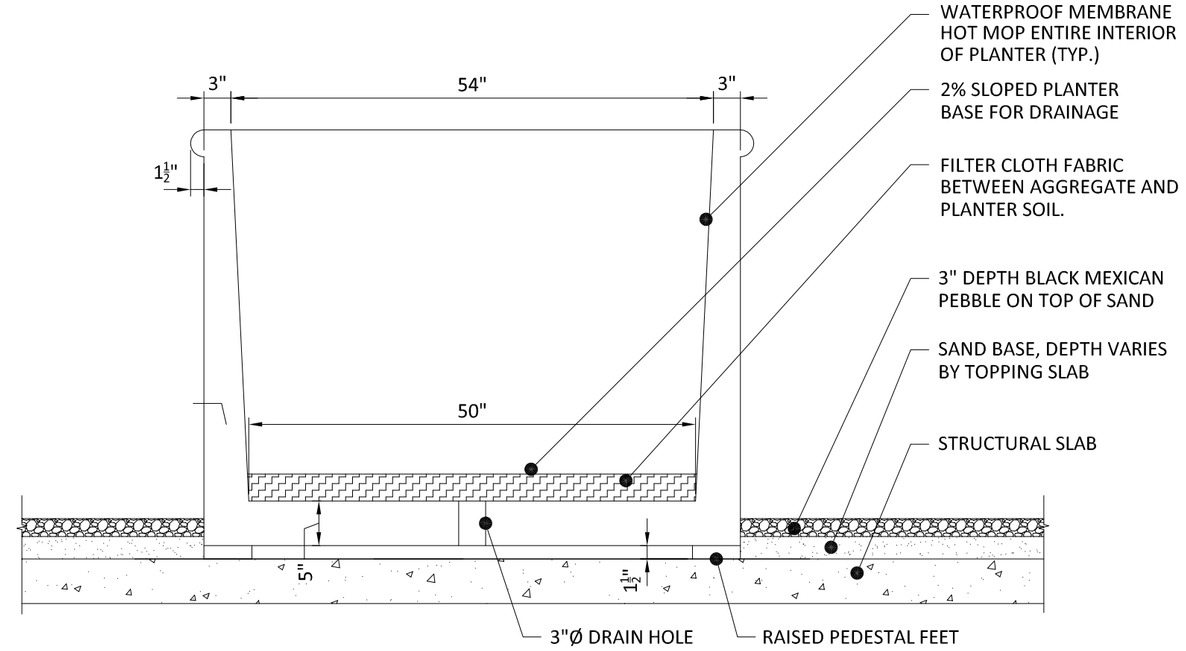

SECTION A-A

1" = 1'-0"

MOORINGS PARK

CENTER FOR HEALTHY LIVING
120 Moorings Park Drive
NAPLES FLORIDA

KerckhoffStone
CONCRETE HARDSCAPE SOLUTIONS
1455 SW 4th Ave, Delray Beach, FL 33444
Tel: (561) 330-3737 | Fax: (239) 566-8432

© KerckhoffStone

NO.	DATE	DESCRIPTION
–	11.11.12	PLANTER LAYOUT

DRAWING LOG

60"x60"x48" PLANTER

SHEET TITLE:

E 1.2

SHEET NUMBER: