DESCRIPTION: BRITTANY WALL CAP	QTY:	PIECE WORK:
COLOR:	TEXTURE:	

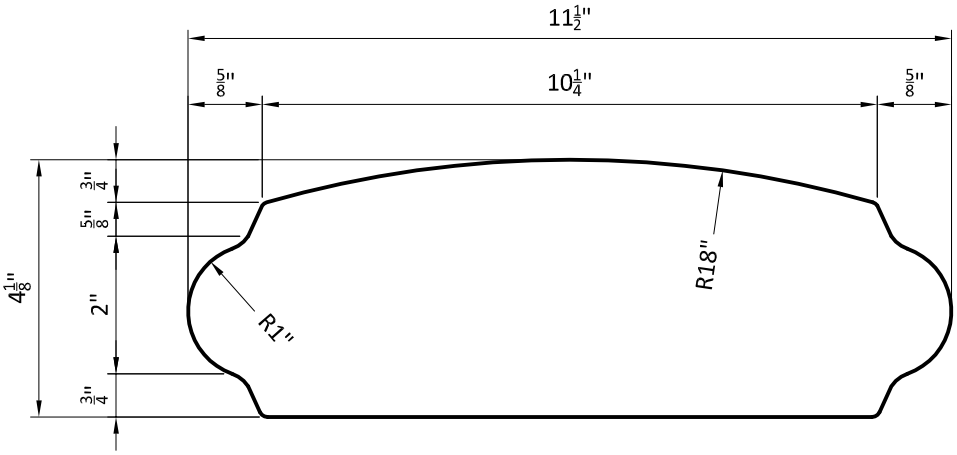

SECTION

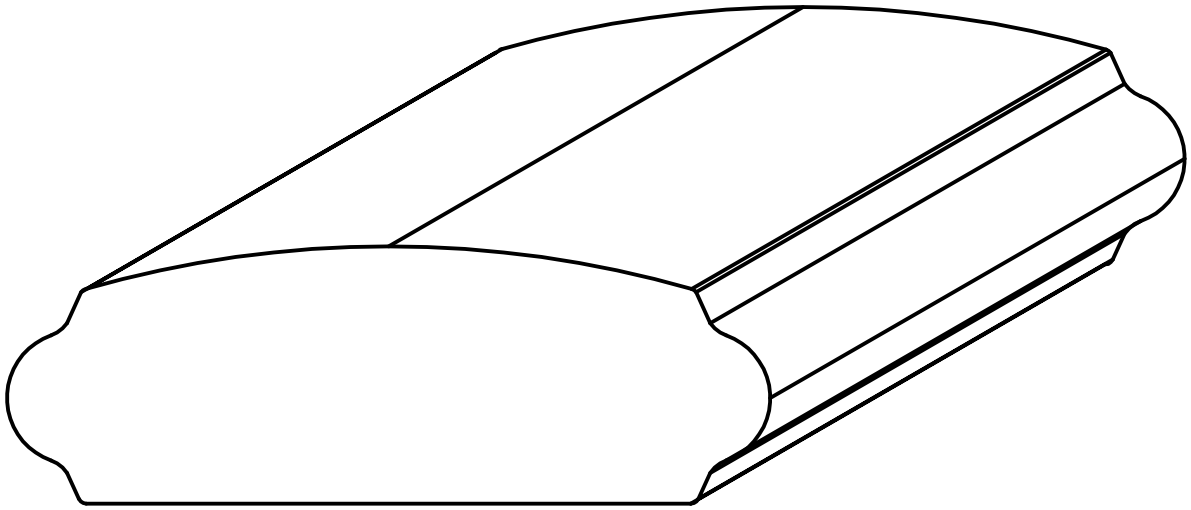

ISOMETRIC

© 2021

D.C. KERCKHOFF COMPANY
STONE CAST™

PROJECT NAME: STONECAST STANDARD		
SCALE: -	WEIGHT / PIECE	DRAWN BY: