DESCRIPTION: BENCH w/ LED LIGHT STRIP	QTY:	PIECE WORK:
COLOR:	TEXTURE:	

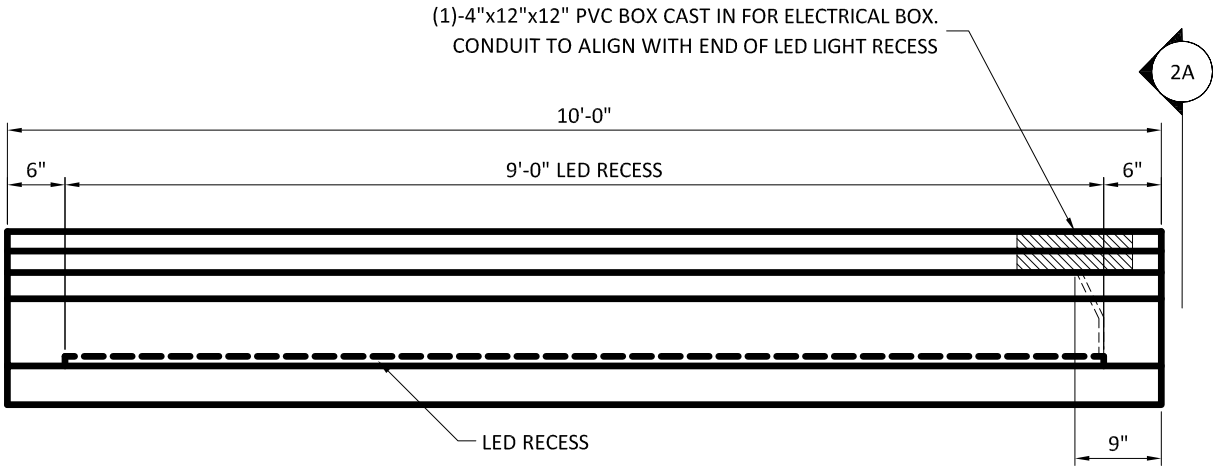

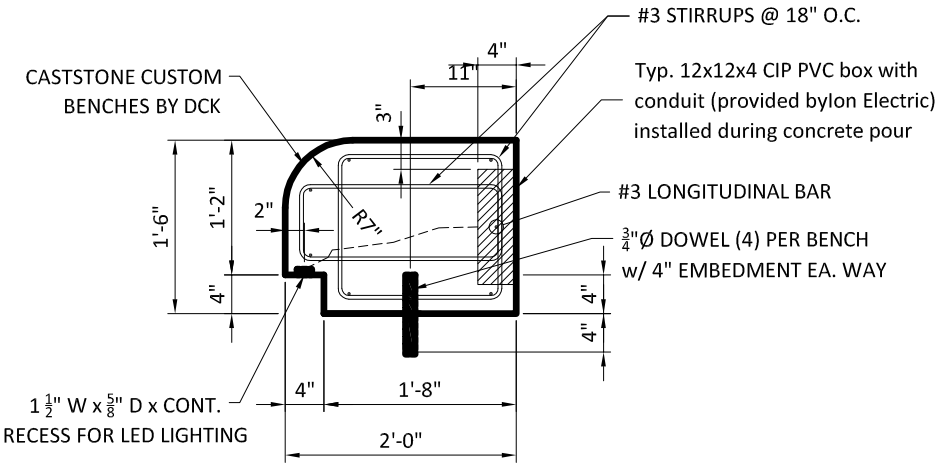

2a SECTION
1" = 1'-0"

© 2021

KerckhoffStone
CONCRETE HARDSCAPE SOLUTIONS

PROJECT NAME: STONECAST STANDARD BENCH		
SCALE:	WEIGHT / PIECE	DRAWN BY: